Type: _____
Project: _____
Catalog No: _____
Lamp/Wattage: _____

Product No. **HT-313M-WH**



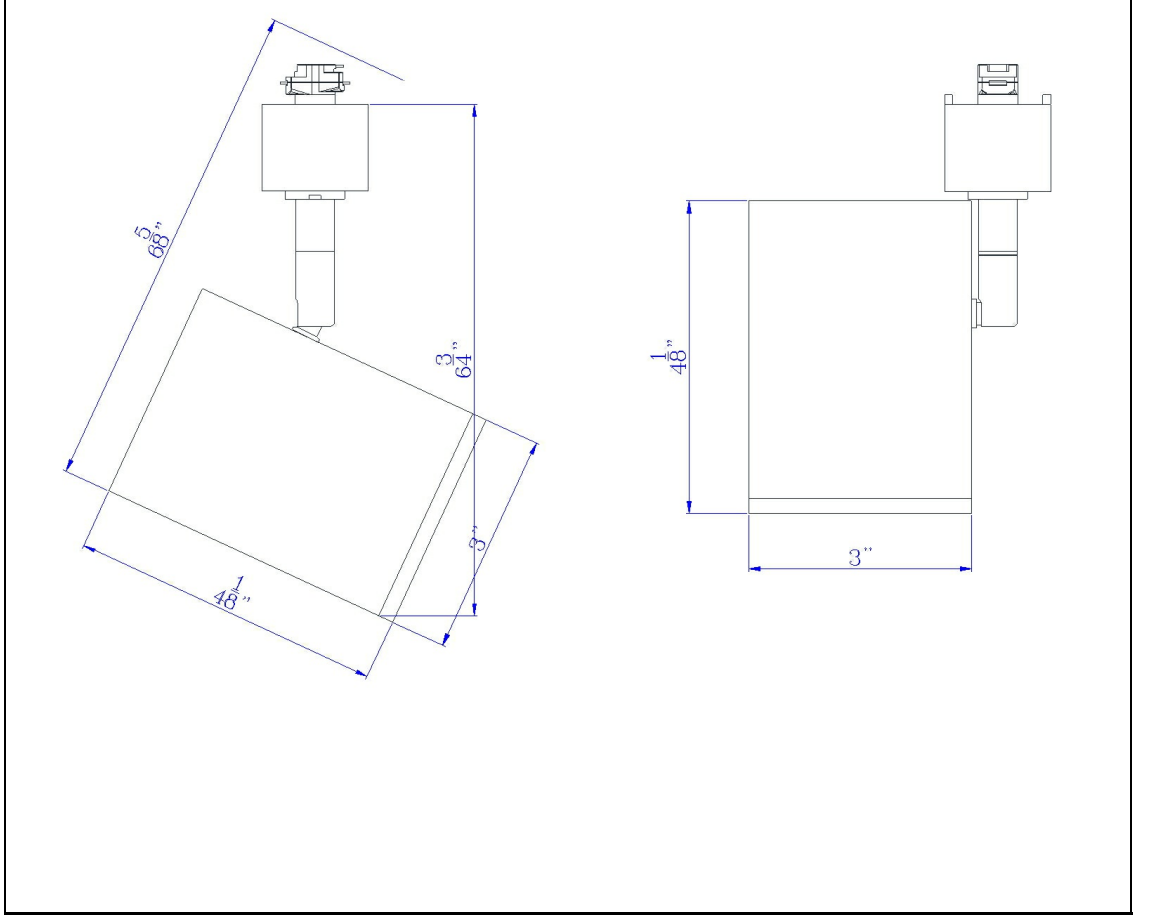

Description

LED dimmable track fixture with three adjustable wattage 10W/15W/20W and color temperature at 3K/35K/4K/5K/6K. Three lenses are also included (15 degreee spot,25 degree narrow flood,36 degree flood
Durable Metal Construction
Adjustable Wattage: 10, 15 or 20 Watts
White Painted Finish
Dimmable Track Head
Adjustable Color Temp from 3-5K
Ships in One Carton
Includes Three Lens Sizes: 15, 25 & 36 Degrees
For use with HT-270,HT-271,HT-272 and HT-273 Series Track
Illuminate your space with this sleek and modern metal LED track fixture. It features an integrated LED and a 3 level temperature which ranges from candlelight to daylight. The track head has a 355 degree rotation capability and is fully dimmable.

Technical Specifications

UPC	020193067284
Wattage	LED10/15/20W
CRI	95
Lumen	1300
Switch Type	DIMMER
Bulb Base	LED
Number of Lights	LED
Color	WH
Base Color	White

Shade Top1	3.00
Shade Bottom1	3.00
Shade Side	4.13
Carton 1 Dimensions	7.00 x 14.00 x 14.50
Carton 2 Dimensions	0.00 x 0.00 x 14.50
Package Dimensions	L: 14.50 W: 14.00 H: 7.00