Type: _____
Project: _____
Catalog No: _____
Lamp/Wattage: _____

Product No. **BO-3076TB**

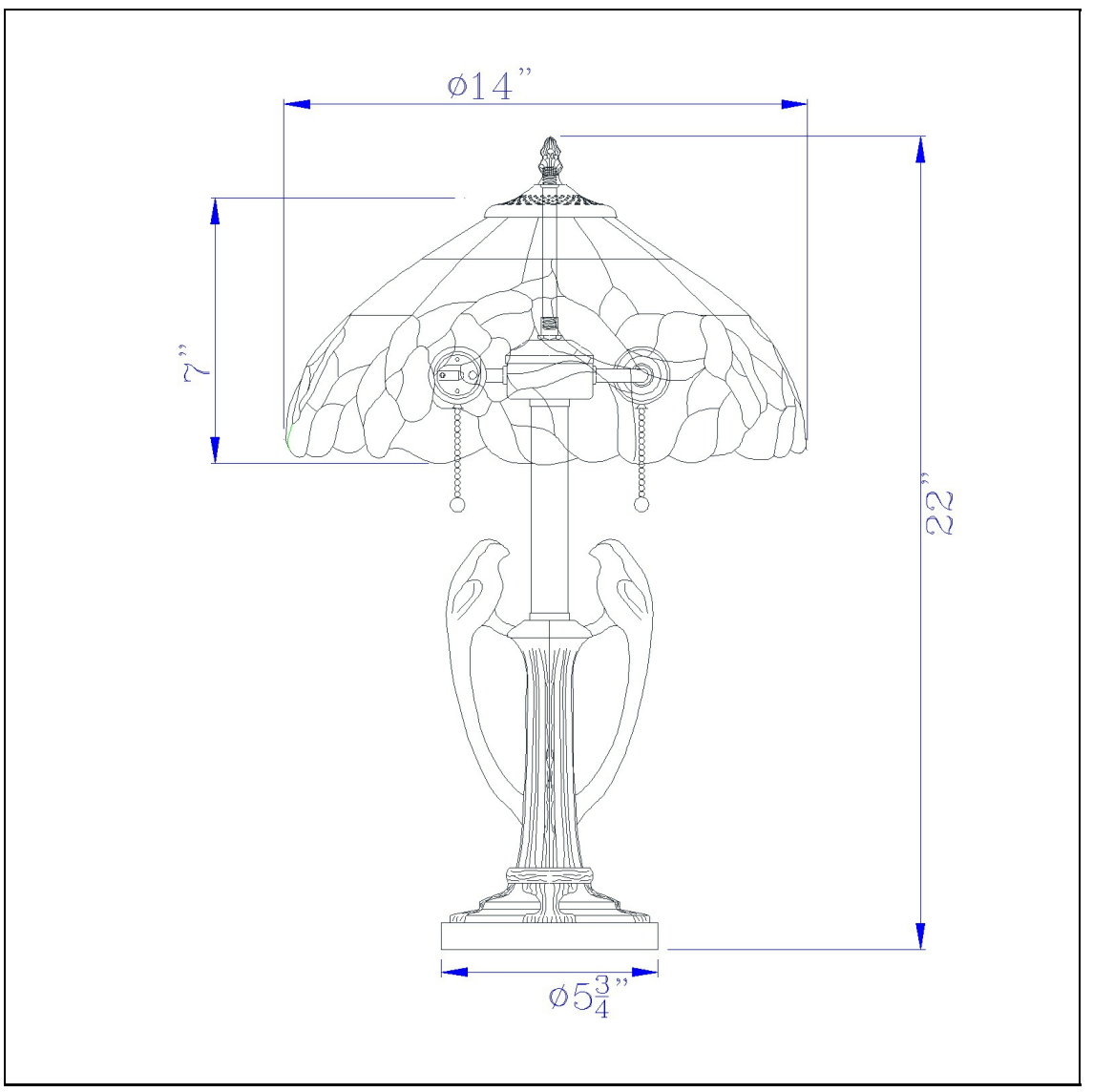

Description

60W x 2 Tiffany table lamp
Durable Resin Construction
Painted Tiffany Art Glass
Pull Chain Mechanism
Little to No Assembly Required
Ships in One Carton
Weighted Base for Added Stability
Total Glass Count: 156 pcs
Zinc cast lamp base
Add a pop of color with this striking colored glasst table lamp. It features a patterned hand painte

Technical Specifications

UPC	020193067284
Wattage	60W X 2
Switch Type	ON/OFF
Bulb Base	E26
Number of Lights	2
Color	Antique Bronze

Shade Bottom1	14.00
Shade Side	7.00
Carton 1 Dimensions	23.30 x 10.80 x 17.50
Carton 2 Dimensions	0.00 x 0.00 x 17.50
Package Dimensions	L: 17.50 W: 10.80 H: 23.30