Type: _____
Project: _____
Catalog No: _____
Lamp/Wattage: _____

Product No. **HT-543L-BK**



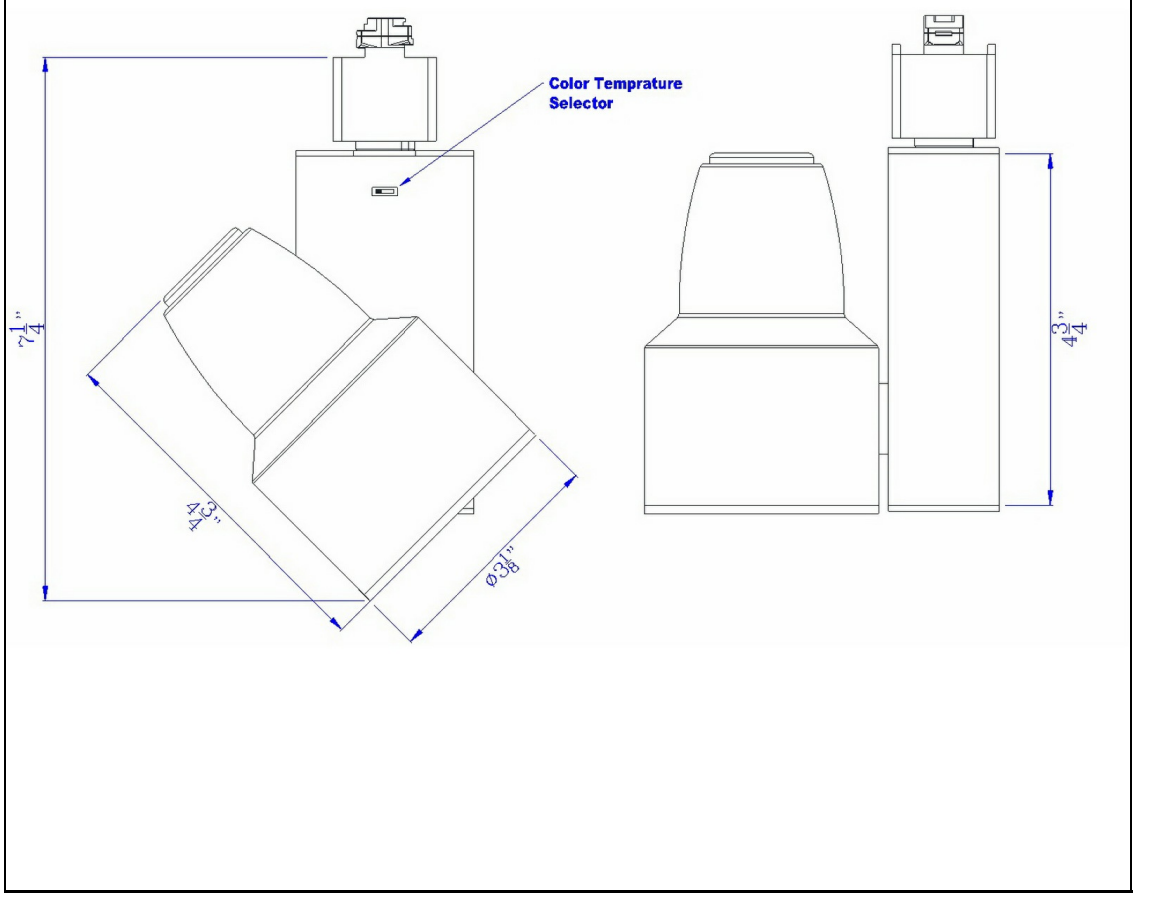

Description

Integrated dimmable 40W LED track fixture with 3 level temperature control. 2700K/3000K/4000K.
Constructed with durable material dimmable integrated LED
Able to change kelvin to 27K, 3K and 4K with one simple switch on the fixture
Swivel design for a broad angles
Three year warranty
Fit 3 wire track system
replacable driver
Dimmable with Lutron Brand Dimmers: DVCL-153P, SCL-153P,AYCL-153P,CTCL-153P,DVCL-253P,DVSCLL-253P,SE
Illuminate your space with this sleek and modern metal LED track fixture from Cal Lighting. It featu

Technical Specifications

UPC	020193067284
Wattage	LED40W
CRI	90
Lumen	2270/2570/2750
Switch Type	Integrated LED
Bulb Base	Integrated LED
Color	Black
Base Color	12

Carton 1 Dimensions	8.00 x 15.50 x 15.50
Carton 2 Dimensions	0.00 x 0.00 x 15.50
Package Dimensions	L: 15.50 W: 15.50 H: 8.00