Type: _____
Project: _____
Catalog No: _____
Lamp/Wattage: _____

Product No. **HT-999WH-CONEBK**



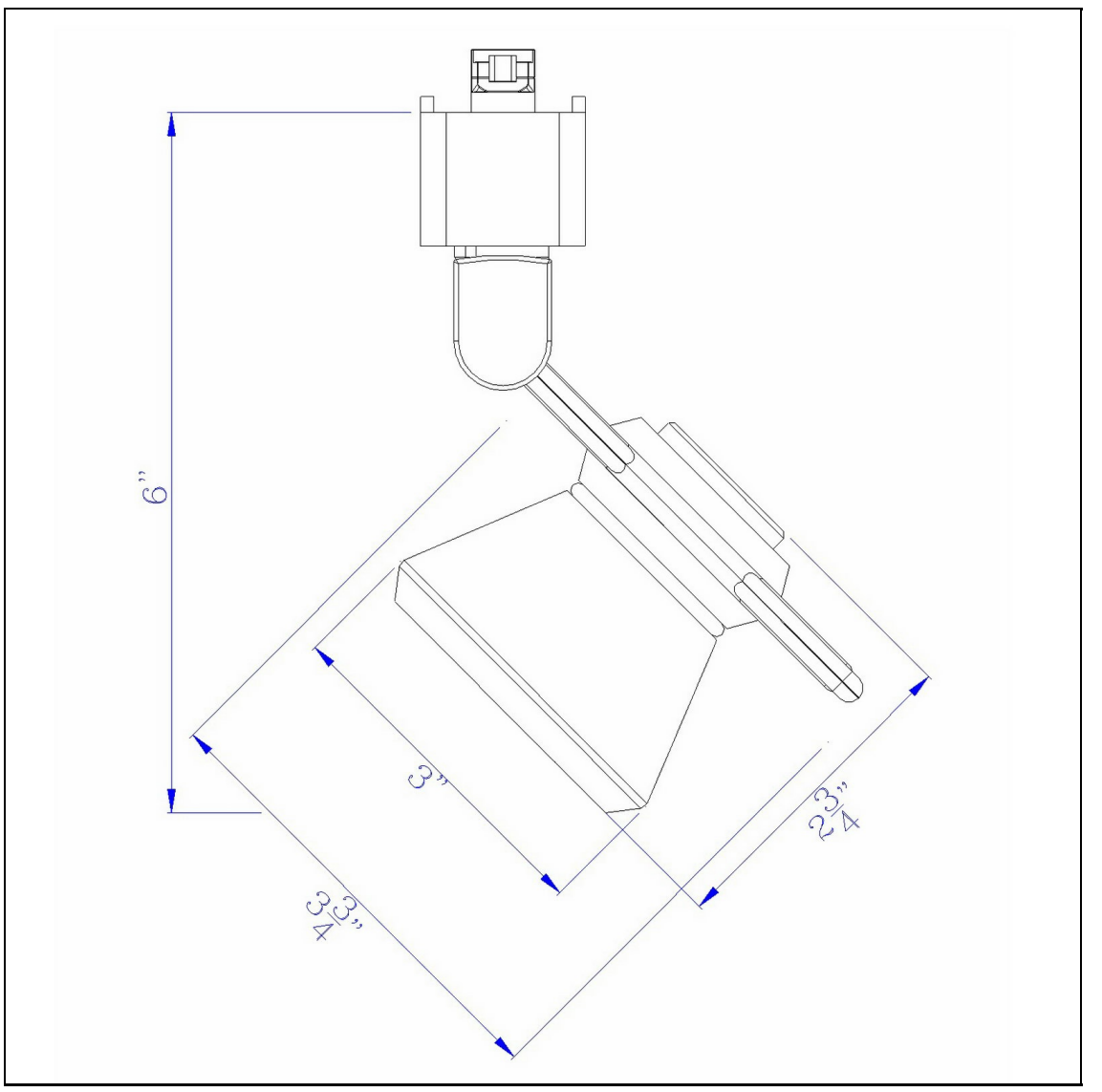

Description

12W Dimmable integrated LED Track Fixture, 750 Lumen, 90 CRI
Durable Metal Construction
Dimmable with Lutron Brand Dimmers: DVCL-153P, SCL-153P,AYCL-153P,CTCL-153P,DVCL-253P,DVSCLL-253P,SE
700 Lumen Output
3000K Light Temperature
355 Degree Rotation
36 Degree Beam
36 Degree Beam
Dimmable with Lutron Brand Dimmers: DVCL-153P, SCL-153P,AYCL-153P,CTCL-153P,DVCL-253P,DVSCLL-253P,SE
6" Height Metal Track Head in White Finish

Technical Specifications

UPC	020193067284
Wattage	LED12W
CRI	90
Lumen	750
Switch Type	Hardwired
Bulb Base	Integrated Led
Number of Lights	1
Color	White
Base Color	White