Type: _____
Project: _____
Catalog No: _____
Lamp/Wattage: _____

Product No. **BO-2885TB-2**

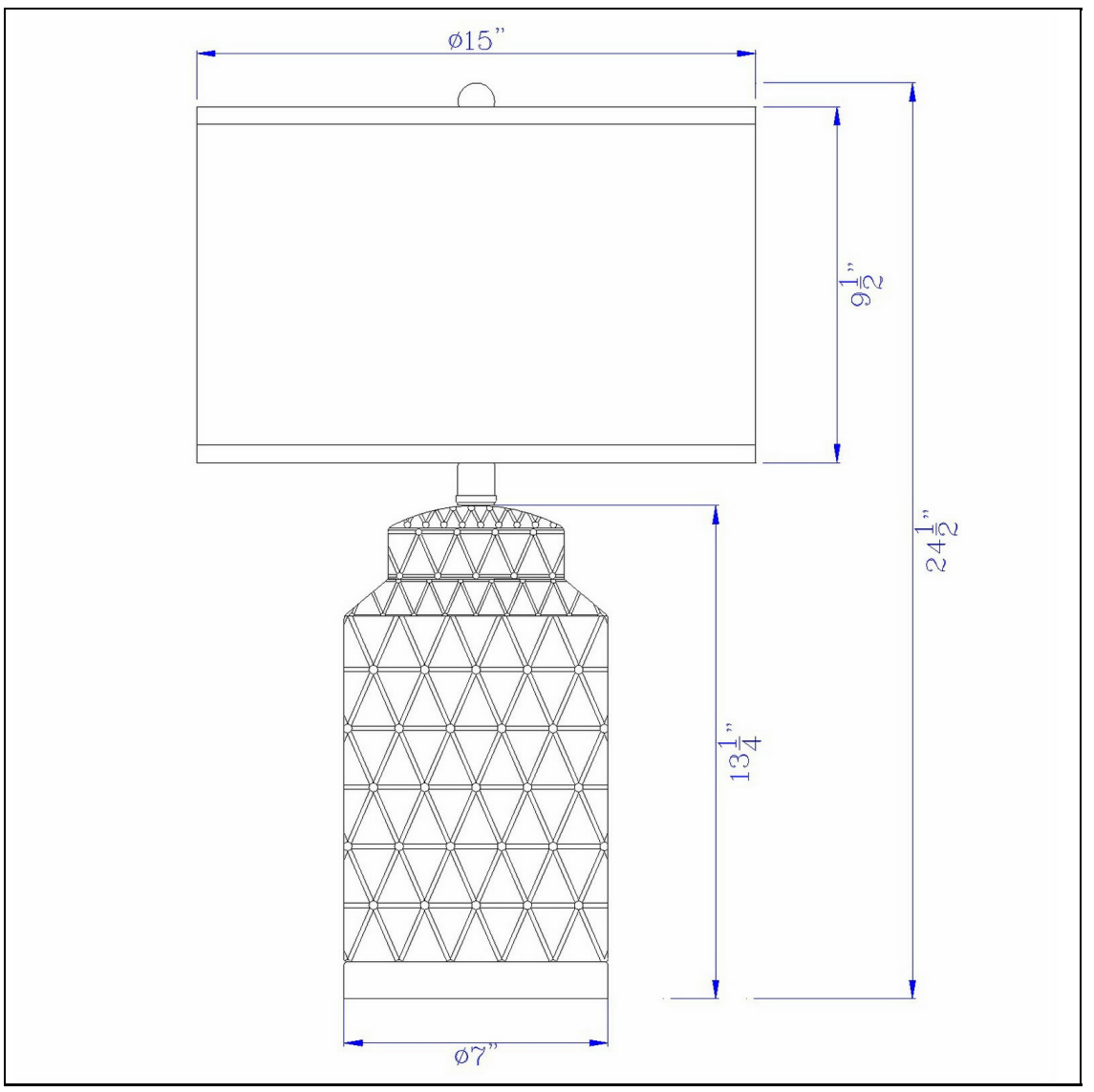

Description

Barletta Ceramic Table Lamp With Hardback Fabric Shade (Sold And Priced As Pairs)
Durable Ceramic Construction
Ships in One Carton
Sold As Pair
Gold Pattern Finish
Hardback Fabric Shade Included
Hardback Fabric Shade Included
24.5" Height Ceramic Table Lamp in Antique Gold Finish

Technical Specifications

UPC	020193067284
Wattage	150W per lamp
CRI	N/A
Lumen	N/A
Switch Type	3 Way Rotary
Bulb Base	E26
Number of Lights	2
Color	Antique Gold
Base Color	Antique Gold

Shade Top1	15.00
Shade Bottom1	15.00
Shade Side	9.50
Carton 1 Dimensions	30.30 x 17.50 x 18.30
Carton 2 Dimensions	0.00 x 0.00 x 18.30
Package Dimensions	L: 18.30 W: 17.50 H: 30.30