Type: _____
Project: _____
Catalog No: _____
Lamp/Wattage: _____

Product No. **FX-3711-6**



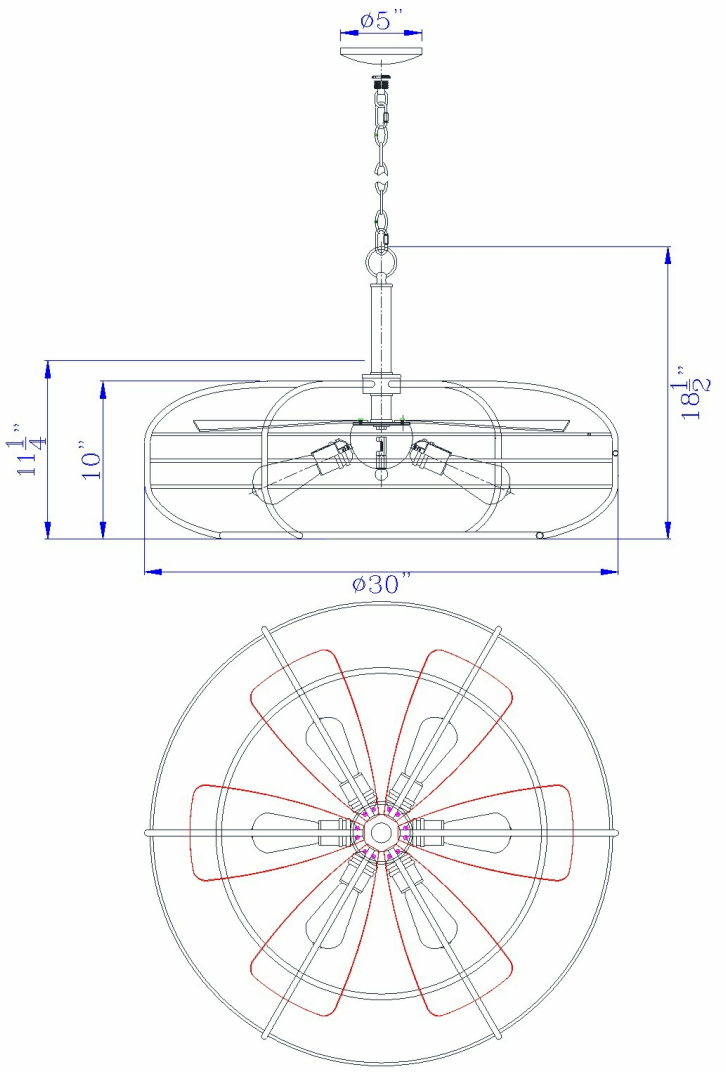

Description

Margo 60W X 6 Metal Chandelier (Edison Bulbs Not included)
Durable Forged Metal Construction
Circular Cage Design
Fan Blade Accent
Two Tone Finish
6 ft chain
Ships in One Carton
Ships in One Carton
18.25" Height Metal Fixture in Dark Bronze Finish

Technical Specifications

UPC	020193067284
Wattage	60WX6
CRI	N/A
Lumen	N/A
Switch Type	Hardwired
Bulb Base	E26
Number of Lights	6
Color	Dark Bronze
Base Color	Dark Bronze

Carton 1 Dimensions	13.50 x 32.50 x 32.50
Carton 2 Dimensions	0.00 x 0.00 x 32.50
Package Dimensions	L: 32.50 W: 32.50 H: 13.50