Type: _____
Project: _____
Catalog No: _____
Lamp/Wattage: _____

Product No. **FX-3700-6L**

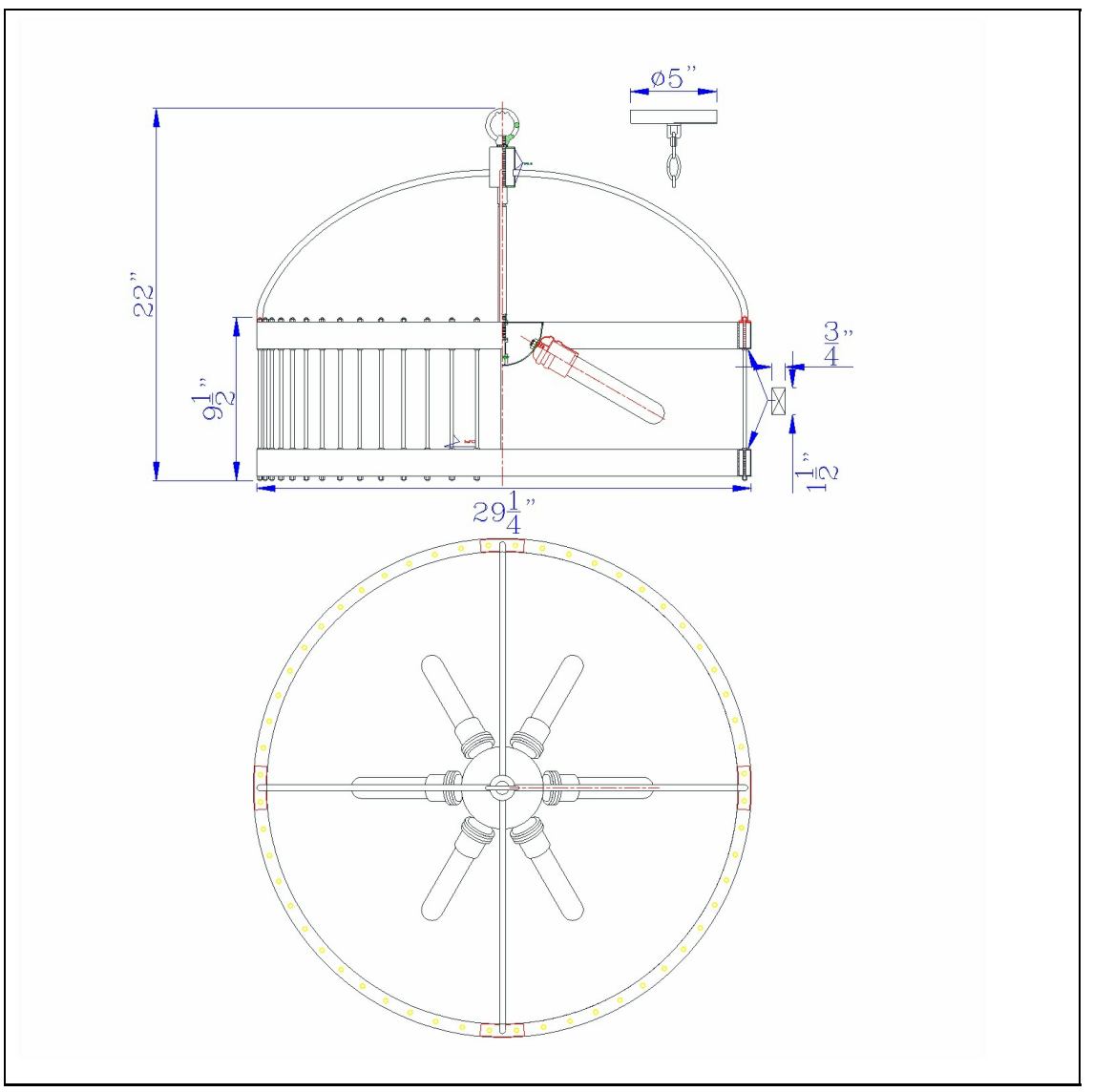

Description

Cantania 60W X 6 Metal Pendant Fixture
(Edison Bulbs Not included)
Durable Metal Construction
Edison Bulb Not Included
Circular Cage Design
72" Chain Included
Ships in One Carton
5" Canopy Included
5" Canopy Included
22" Height Metal Fixture in Metal Finish

Technical Specifications

UPC	020193067284
Wattage	60WX6
CRI	N/A
Lumen	N/A
Switch Type	Hardwired
Bulb Base	E26
Number of Lights	6
Color	Metal
Base Color	Metal

Carton 1 Dimensions	14.30 x 32.80 x 32.80
Carton 2 Dimensions	0.00 x 0.00 x 32.80
Package Dimensions	L: 32.80 W: 32.80 H: 14.30