Type: _____
Project: _____
Catalog No: _____
Lamp/Wattage: _____

Product No. **FX-3817-4**



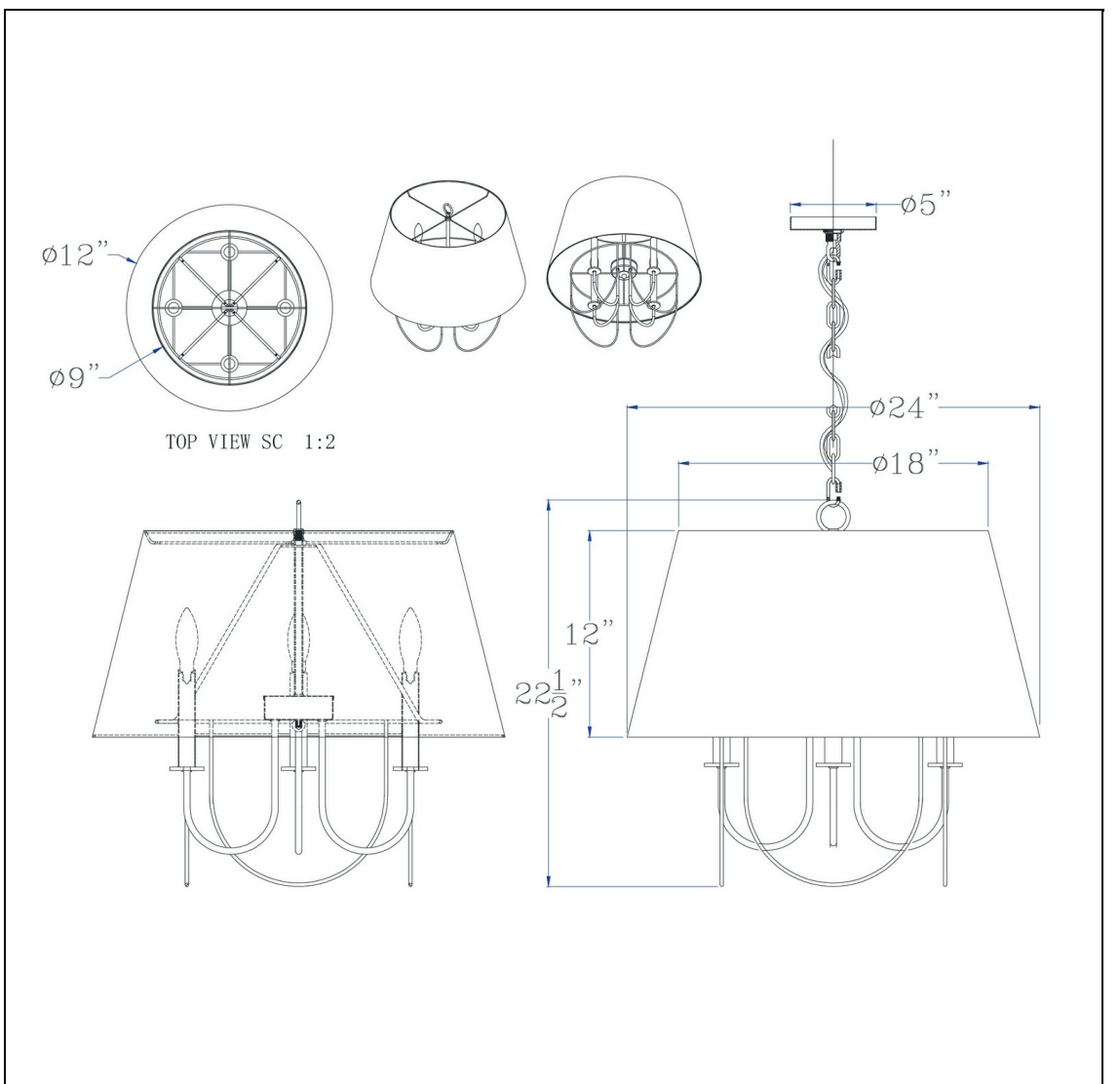

Description

60W x 4 Eupora metal chandelier with burlap shade
Durable Metal Construction
Two Tone Finish
Hardback Burlap Shade
6 Feet of Chain
Canopy Included
Ships in 1 Carton

Technical Specifications

UPC	020193067284
Wattage	60W X 4
Bulb Base	E12
Number of Lights	6
Color	Antique Brass / Black
Base Color	Antique Brass

Carton 1 Dimensions	14.30 x 26.50 x 26.50
Carton 2 Dimensions	0.00 x 0.00 x 26.50
Package Dimensions	L: 26.50 W: 26.50 H: 14.30