Type: _____
Project: _____
Catalog No: _____
Lamp/Wattage: _____

Product No. **FX-3816-3**



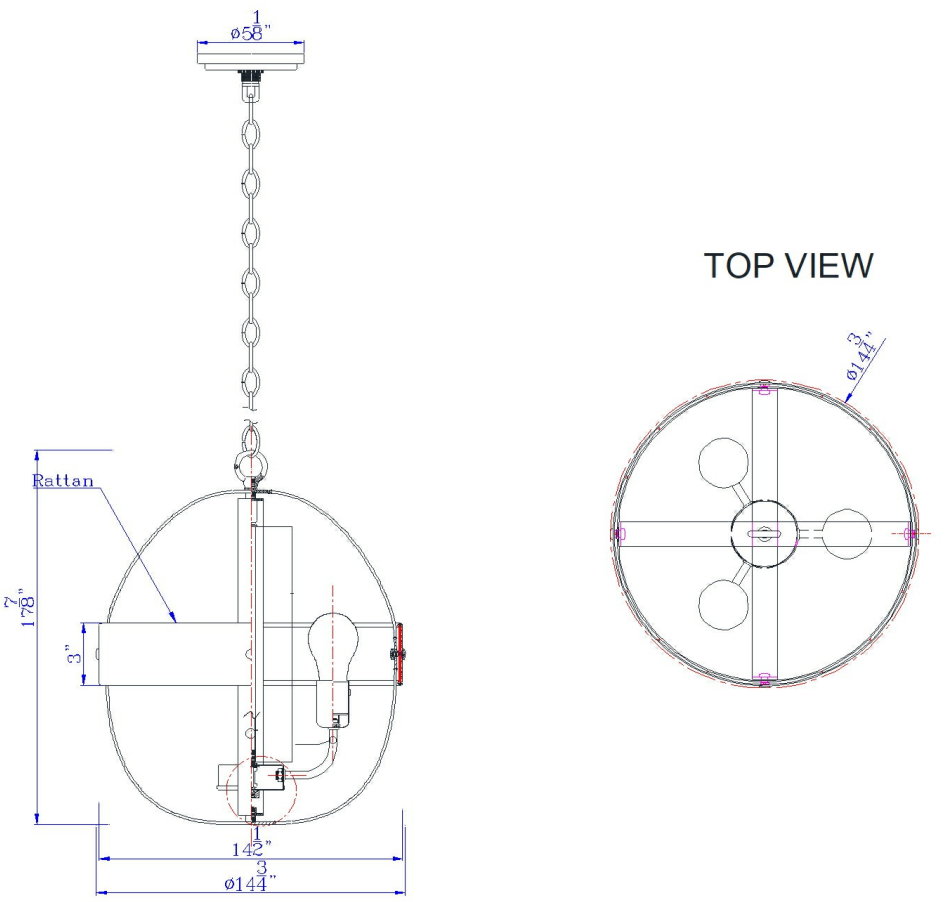

Description

60W x 3 Barton metal chandelier with rattan design
Durable Metal Construction
60W x 3 Barton metal chandelier with rattan design
White Washed Finished
Rattan Accents
Canopy Included
Ships in One Carton
Installation/Assembly Required
Hardwired Switch
This contemporary orb style chandelier is a wonderful addition to any kitchen, living room or dining room. It features a white wash painted finish with burlap rope accents. It ships complete with matching canopy and 72" chain

Technical Specifications

UPC	020193067284
Wattage	60W X 3
Bulb Base	E26
Number of Lights	3
Color	White Washed
Base Color	White Washed

Carton 1 Dimensions	19.50 x 11.50 x 17.00
Carton 2 Dimensions	0.00 x 0.00 x 17.00
Package Dimensions	L: 17.00 W: 11.50 H: 19.50