Type: _____
Project: _____
Catalog No: _____
Lamp/Wattage: _____

Product No. **FX-3744-PUR**



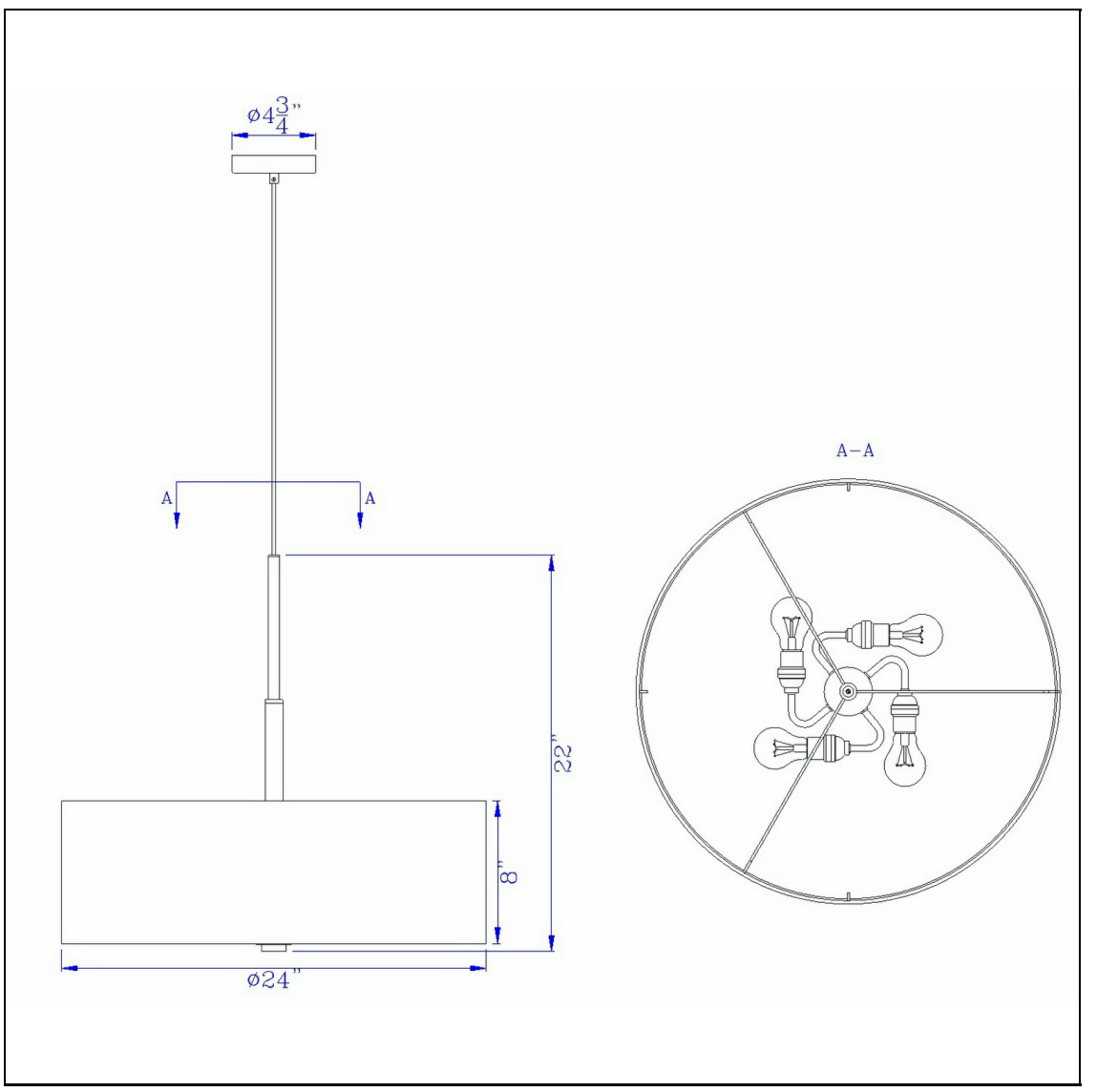

Description

60W x 4 Lonoke pendant fixture with hardback drum shade
Constructed with durable material
Come with 72" customizable cord
Drum shade
6 lights
Canopy included
Metal two steps decoration pole
Plum color shade
Plum color shade
Add a pop of color to your d?cor with this plum drum pendant light. It features a smooth fabric drum

Technical Specifications

UPC	020193067284
Wattage	60W X 4
Switch Type	E26
Bulb Base	E26
Number of Lights	4
Color	Plum
Base Color	1

Shade Top1	24.00
Shade Bottom1	24.00
Shade Side	8.00
Carton 1 Dimensions	10.50 x 25.50 x 25.50
Carton 2 Dimensions	0.00 x 0.00 x 25.50
Package Dimensions	L: 25.50 W: 25.50 H: 10.50