Type: _____
Project: _____
Catalog No: _____
Lamp/Wattage: _____

Product No. **HT-813-BK**

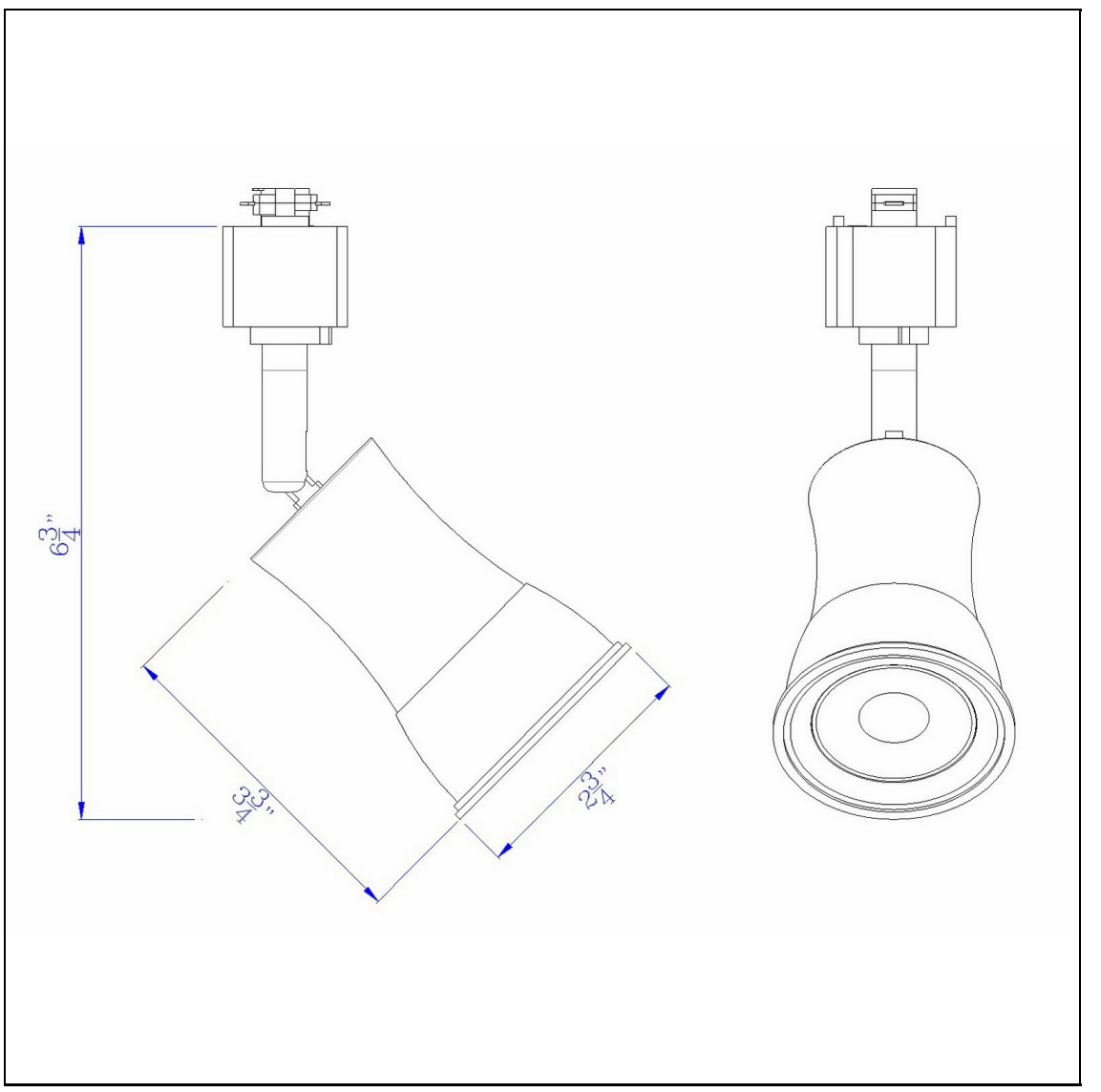

Description

12W Dimmable integrated LED Track Fixture, 720 Lumen, 90 CRI
Durable Aluminum Cast Construction
Dimmable with Lutron Brand Dimmers: DVCL-153P, SCL-153P,AYCL-153P,CTCL-153P,DVCL-253P,DVSCLL-253P,SE
720 Lumen Output
3000K Light Temperature
355 Degree Rotation
38 Degree Beam
38 Degree Beam
Dimmable with Lutron Brand Dimmers: DVCL-153P, SCL-153P,AYCL-153P,CTCL-153P,DVCL-253P,DVSCLL-253P,SE
6.75" Height Aluminum Cast Track in Black Finish

Technical Specifications

UPC	020193067284
Wattage	LED12W
CRI	90
Lumen	720
Switch Type	Hardwired
Bulb Base	Integrated Led
Number of Lights	1
Color	Black
Base Color	Black

Carton 1 Dimensions	11.50 x 13.00 x 15.00
Carton 2 Dimensions	0.00 x 0.00 x 15.00
Package Dimensions	L: 15.00 W: 13.00 H: 11.50