Type: _____
Project: _____
Catalog No: _____
Lamp/Wattage: _____

Product No. **BO-2873FL-5L-BS**

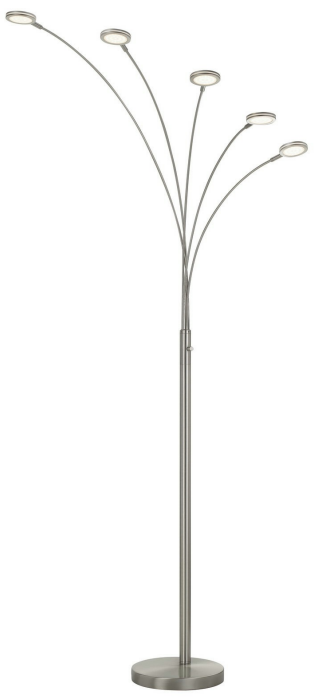

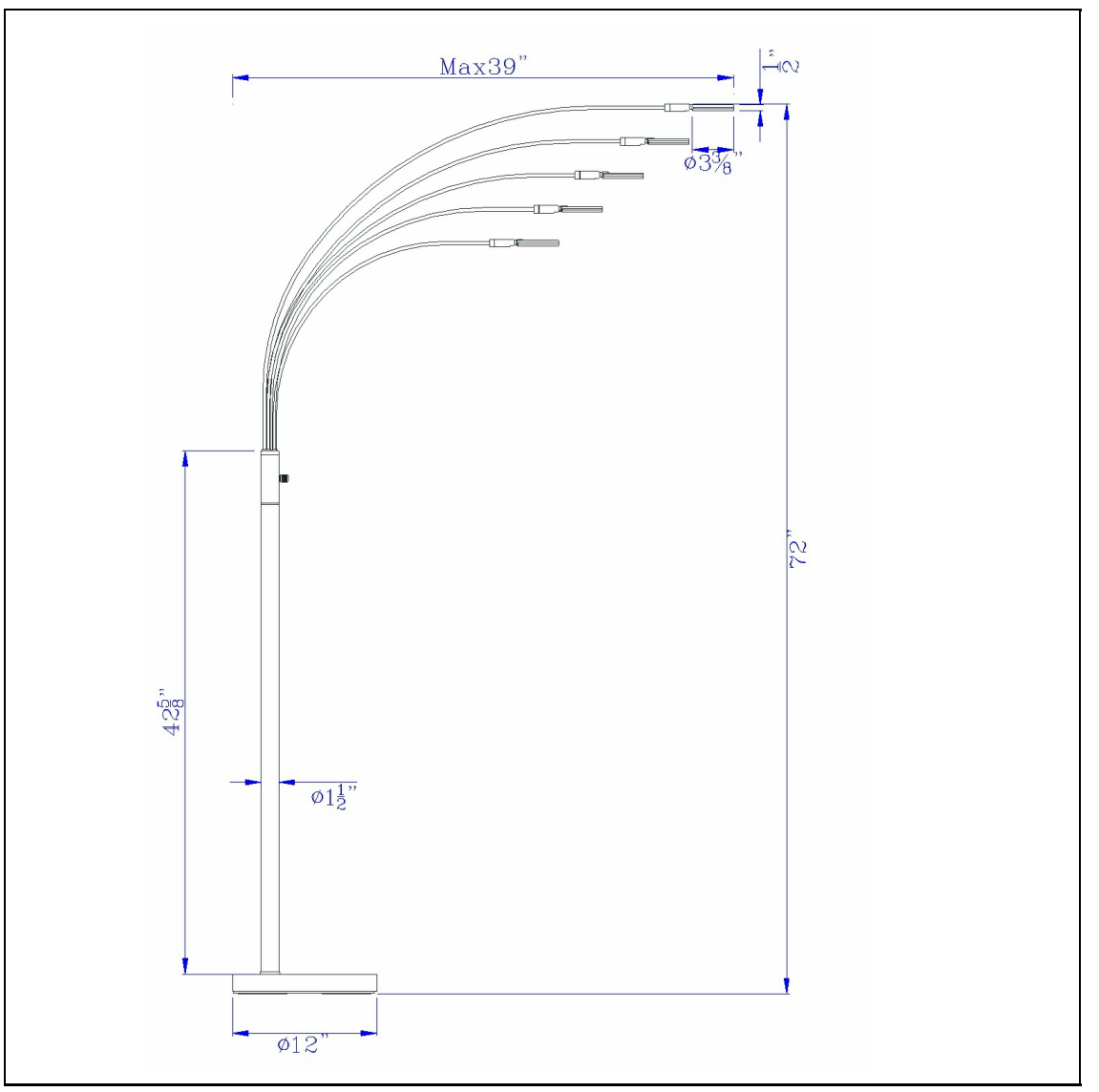

Description

Cremona integrated LED Metal Arc Floor Lamp
Durable Metal Construction
Integrated Led Light
Diffused Light Look
3000K Light Temperature
Three Way Light
Three Way Light
79" Height Metal Floor Lamp in Brushed Steel Finish

Technical Specifications

UPC	020193067284
Wattage	4WX5
CRI	85
Lumen	240 x 5
Switch Type	3 Way Rotary
Bulb Base	Integrated LED
Number of Lights	5
Color	Brushed Steel
Base Color	Brushed Steel

Shade Top1	3.38
Shade Bottom1	3.38
Shade Side	0.50
Carton 1 Dimensions	18.80 x 4.00 x 54.30
Carton 2 Dimensions	0.00 x 0.00 x 54.30
Package Dimensions	L: 54.30 W: 4.00 H: 18.80