Type: _____
Project: _____
Catalog No: _____
Lamp/Wattage: _____

# Product No. **FX-3700-1**



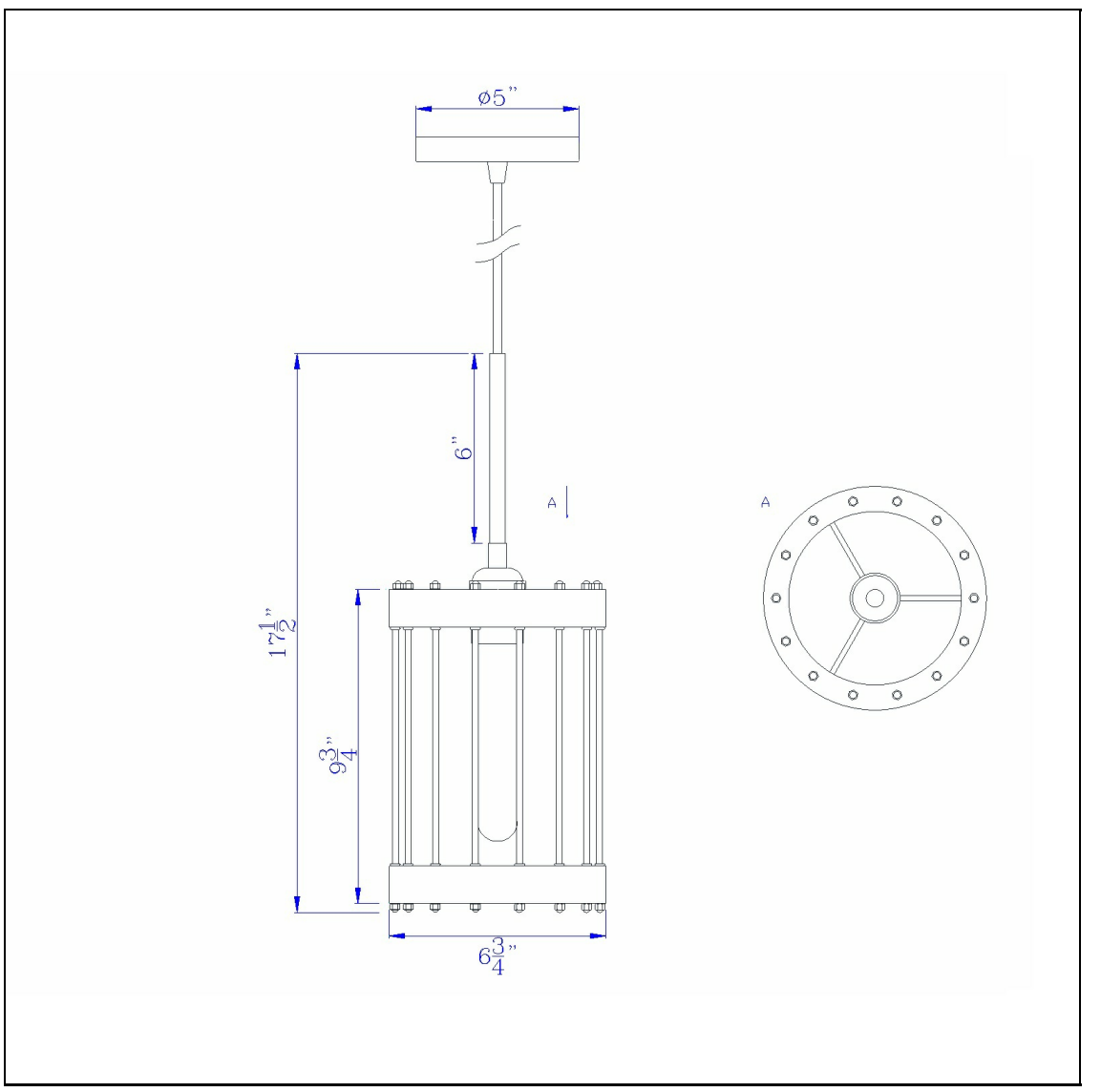


## Description

Cantania 60W Metal Pendant Fixture (Edison Bulbs Not included)
Durable Metal Construction
Edison Bulb Not Included
Caged Cylinder Design
72" Cord Length
Ships in One Carton
5" Canopy Included
5" Canopy Included
17.5" Height Metal Fixture in Metal Finish

## Technical Specifications

| | |
|---|---|
| **UPC** | 020193067284 |
| **Wattage** | 60W |
| **CRI** | N/A |
| **Lumen** | N/A |
| **Switch Type** | Hardwired |
| **Bulb Base** | E26 |
| **Number of Lights** | 1 |
| **Color** | Metal |
| **Base Color** | Metal |

| | |
|---|---|
| **Carton 1 Dimensions** | 16.30 x 9.50 x 9.50 |
| **Carton 2 Dimensions** | 0.00 x 0.00 x 9.50 |
| **Package Dimensions** | L: 9.50 W: 9.50 H: 16.30 |