Type: _____
Project: _____
Catalog No: _____
Lamp/Wattage: _____

Product No. **LA-60003DK-4RBS**



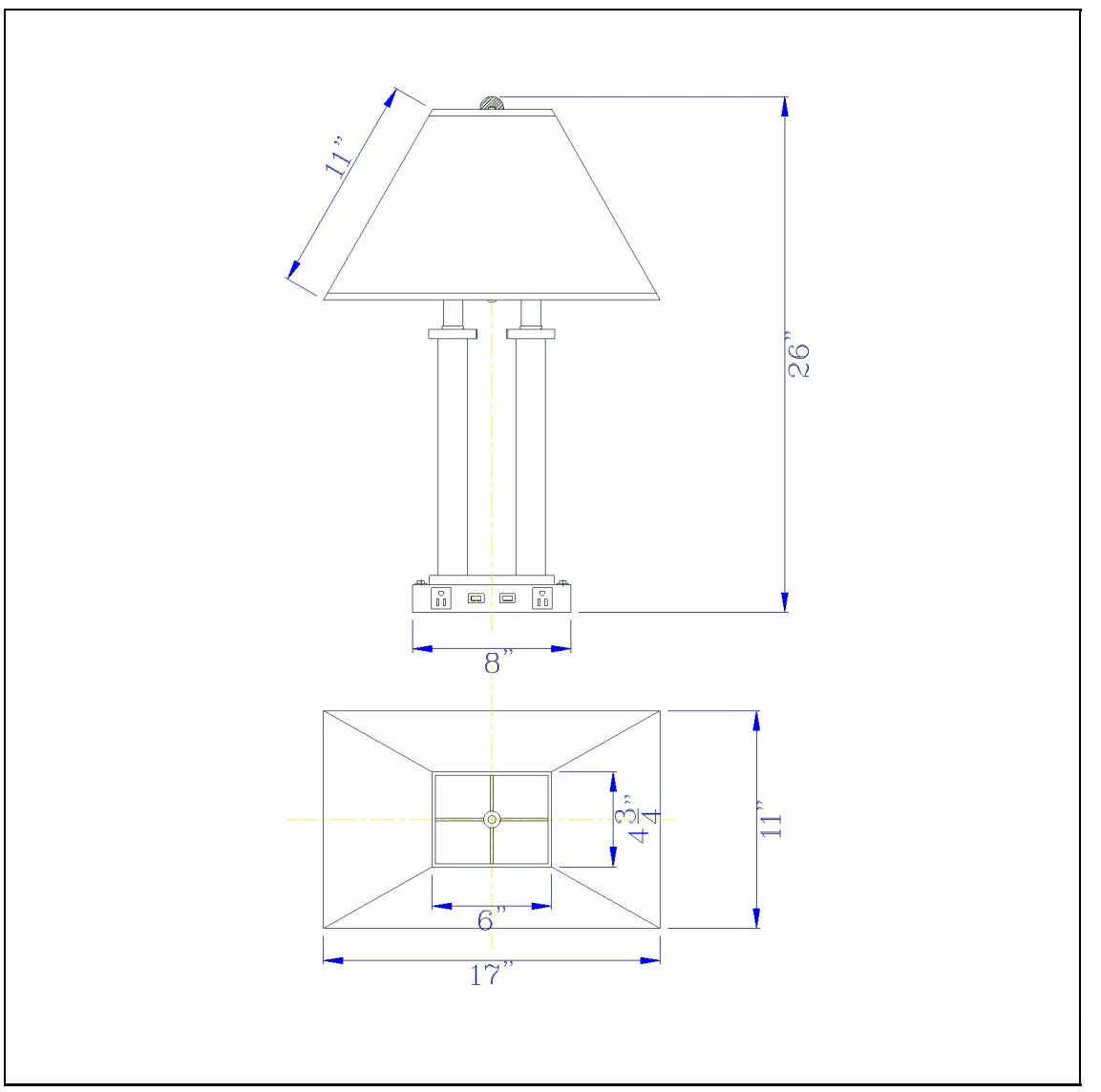

Description

60W X 2 Metal Desk Lamp With 2 USB And 2 Power Outlets, On Off Rocker Base Switch
Durable Metal Construction
Features Two Functional USB Ports
Includes Two Power Outlets
Uses Two 60W Max Bulb
Rocker Switch On/Off Switch
Rocker Switch On/Off Switch
26" Height Metal Desk Lamp in Brushed Steel Finish

Technical Specifications

UPC	020193067284
Wattage	60WX2
CRI	N/A
Lumen	N/A
Switch Type	On/Off
Bulb Base	E26
Number of Lights	2
Color	Brushed Steel
Base Color	Brushed Steel

Shade Top1	4.75
Shade Top2	6.00
Shade Bottom1	11.00
Shade Bottom2	17.00
Shade Side	11.00
Carton 1 Dimensions	21.00 x 8.50 x 10.50
Carton 2 Dimensions	11.00 x 18.00 x 10.50
Carton 3 Dimensions	0.00 x 0.00 x 2.05
Package Dimensions	L: 10.50 W: 8.50 H: 21.00