Type: _____
Project: _____
Catalog No: _____
Lamp/Wattage: _____

Product No. **LA-2004NS-1RBS**



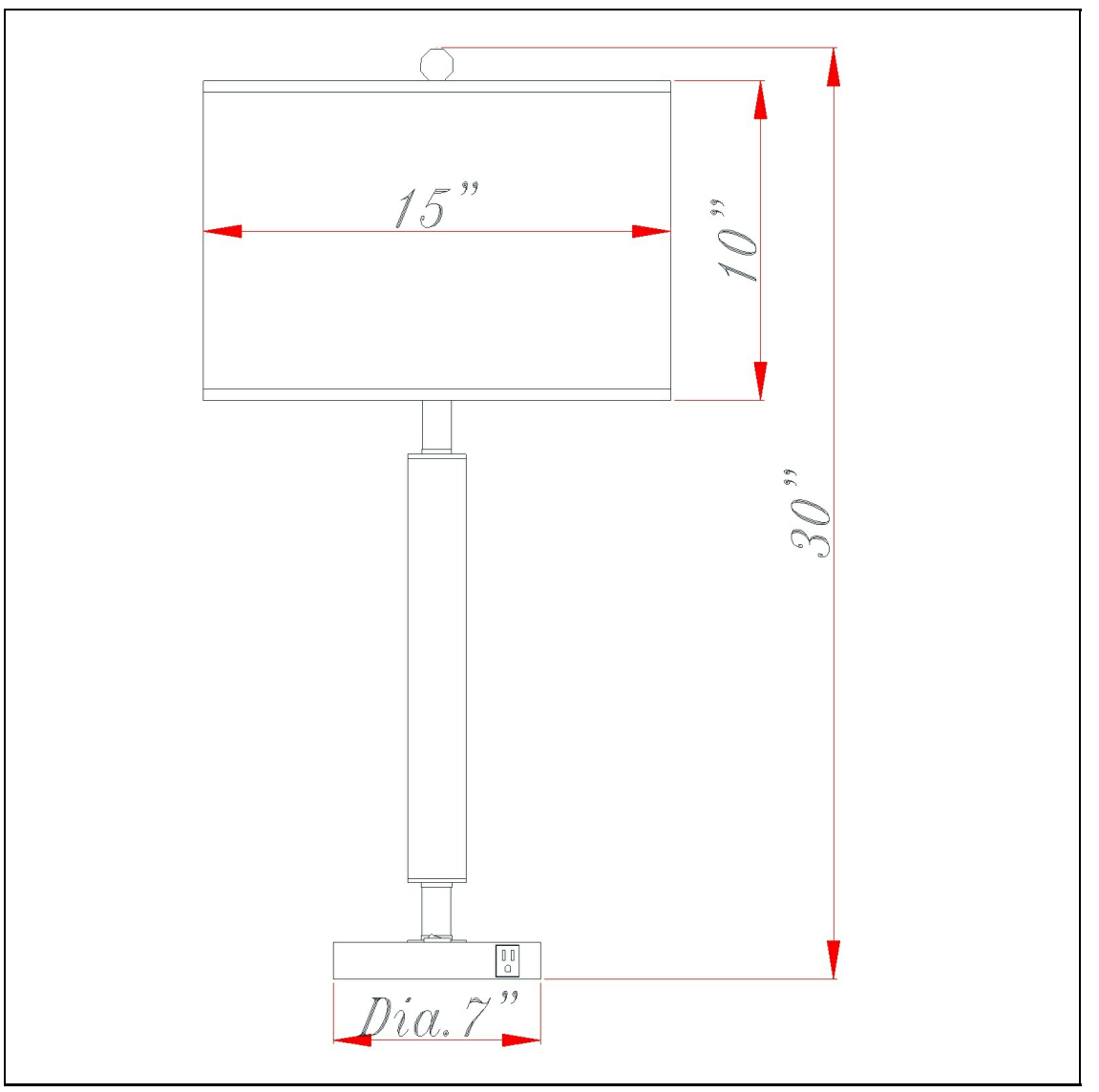

Description

100W, 1 Outlet, 1 Rocker Switch
Durable Metal Construction
Single Outlet on Base for Easy Access
Single Rocker Switch on Base for Easy Access
Ships in One Carton
UL listed
UL listed
30" Tall Metal Table Lamp in Brushed Steel

Technical Specifications

UPC	020193067284
Wattage	100W
CRI	N/A
Lumen	N/A
Switch Type	On/Off Rocker
Bulb Base	E26
Number of Lights	1
Color	Brushed Steel
Base Color	Brushed Steel

Shade Top1	11.00
Shade Top2	15.00
Shade Bottom1	11.00
Shade Bottom2	15.00
Shade Side	10.00
Carton 1 Dimensions	15.00 x 16.10 x 15.00
Carton 2 Dimensions	0.00 x 0.00 x 15.00
Package Dimensions	L: 15.00 W: 16.10 H: 15.00