Lighting & Accessories

Type: _____
Project: _____
Catalog No: _____
Lamp/Wattage: _____

Product No. **BO-2372FL**



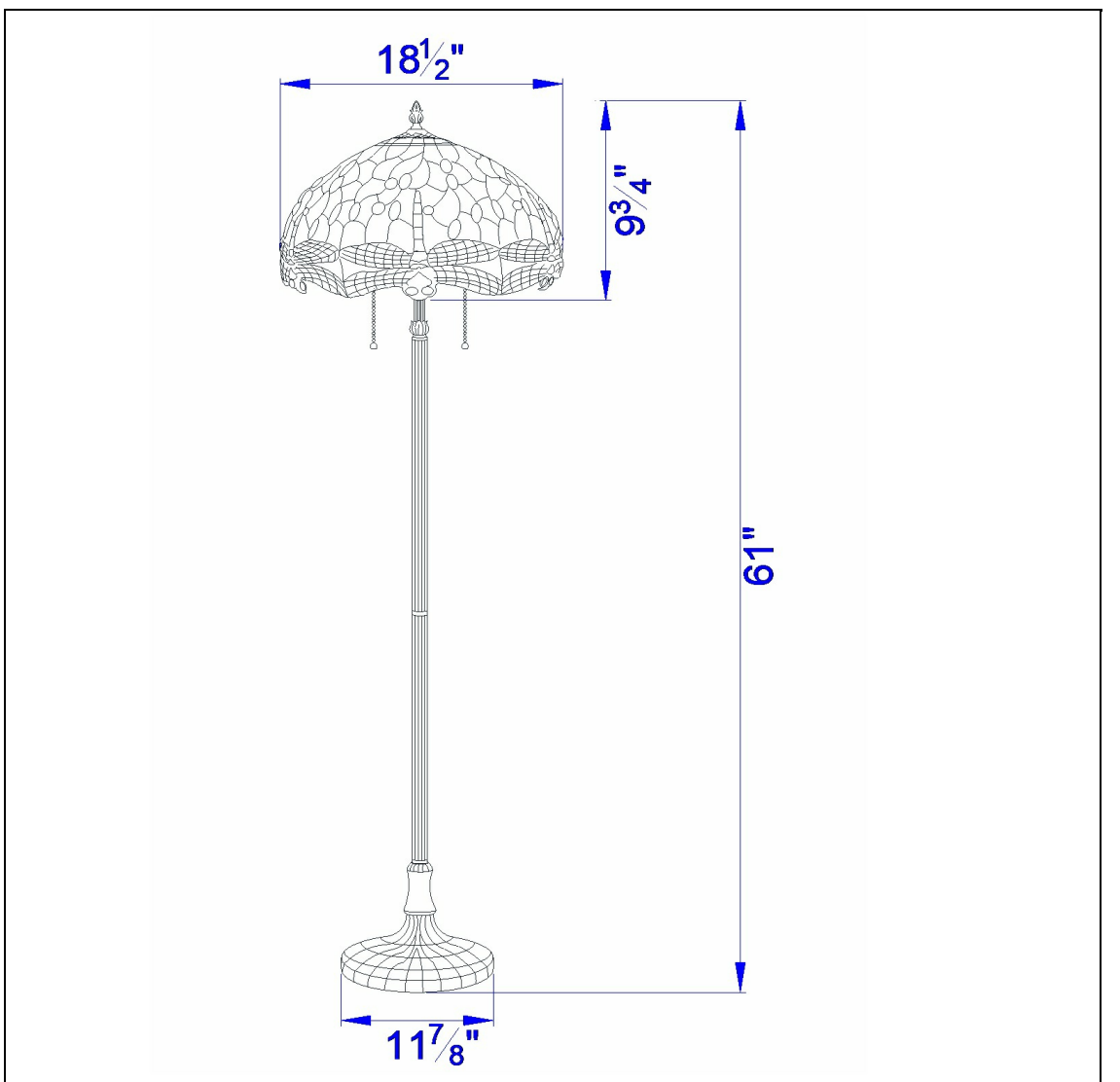

Description

60Wx2 Tiffany floor lamp ,Zinc Cast Base
Durable zinc construction
Tiffany stained glass shade
Double light
Pull chain mechanism
6 Foot cord
Total glass count: 402 pcs
Ships in one carton
60" Height Zinc Cast Floor Lamp in Antique Brass

Technical Specifications

UPC	020193067284
Wattage	60WX2
CRI	N/A
Lumen	N/A
Switch Type	On/Off
Bulb Base	E26
Number of Lights	2
Color	Antique Brass
Base Color	Antique Brass

Shade Bottom1	18.50
Shade Side	9.75
Carton 1 Dimensions	14.90 x 22.00 x 23.30
Carton 2 Dimensions	0.00 x 0.00 x 23.30
Package Dimensions	L: 23.30 W: 22.00 H: 14.90