Type: _____
Project: _____
Catalog No: _____
Lamp/Wattage: _____

Product No. **BO-216-BS**



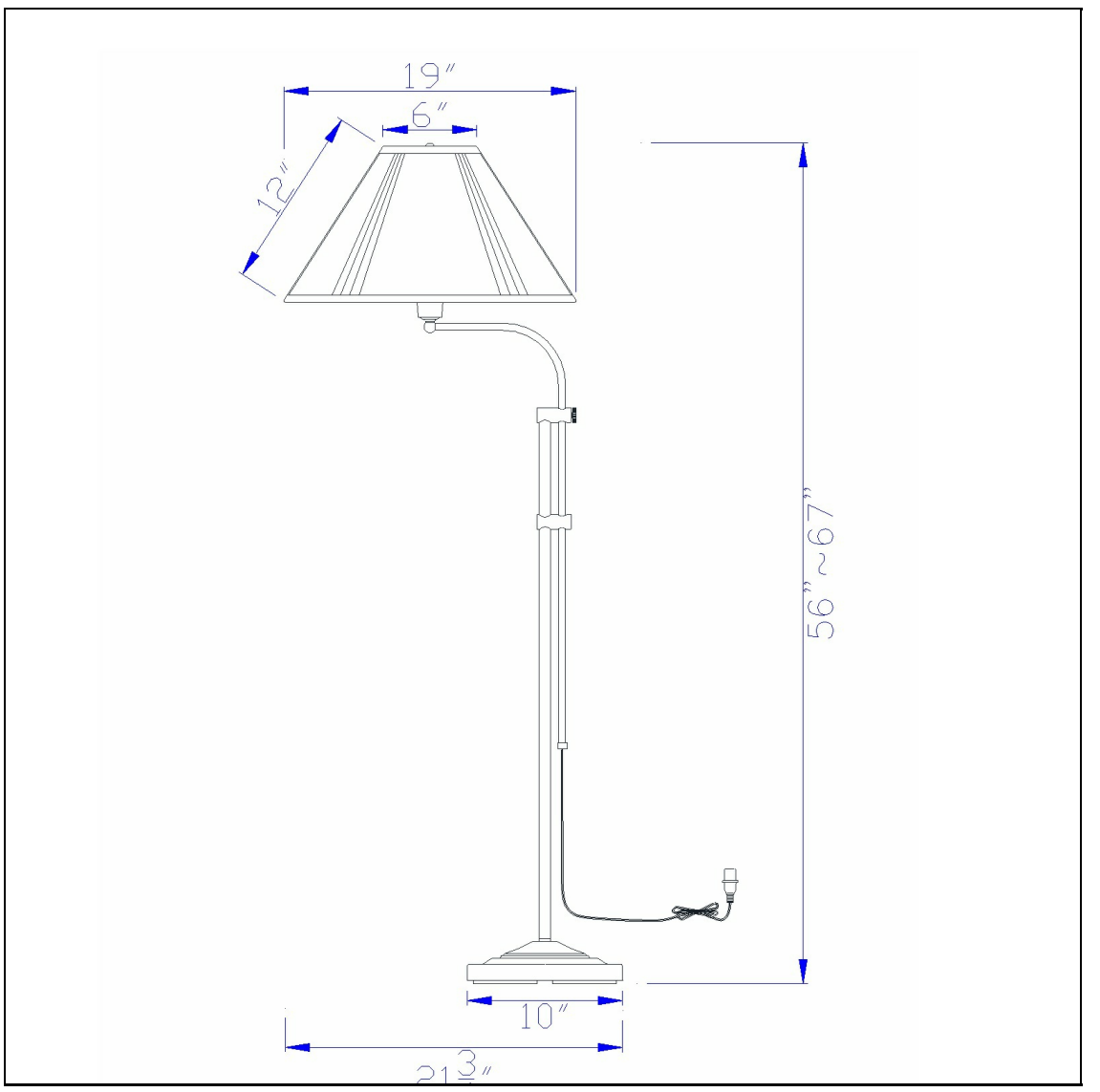

Description

150W 3 Way Floor Lamp W/Adjust Pole
Durable metal construction
Includes hardback fabric shade
Spider type shade
Three way mechanism for optimal control of light
6 Foot cord
6 Foot cord
67.5" Height Metal Floor Lamp in Brushed Steel

Technical Specifications

UPC	020193067284
Wattage	150W
CRI	N/A
Lumen	N/A
Switch Type	3-Way
Bulb Base	E26
Number of Lights	1
Color	Brushed Steel
Base Color	Brushed Steel

Carton 1 Dimensions	27.50 x 5.00 x 12.80
Carton 2 Dimensions	12.00 x 20.00 x 12.80
Carton 3 Dimensions	20.00 x 20.00 x 10.00
Package Dimensions	L: 12.80 W: 5.00 H: 27.50